POLFLAM®
FIRE RESISTANT GLASS

FIRE-RESISTANT GLASS IN TIMBER STRUCTURES

IPOLFLAM competitive advantages

IPOLFLAM is an independent manufacturer of fire protection glass: beginning with technology through research – down to production. IPOLFLAM fire protection glass is made in modern hydrogel technology. It allows you to obtain glass of exceptional functionality.

On the European market, IPOLFLAM brand is today an unquestionable synonym of product quality.

Colours available

RAL palette

NCS palette

Glass variants

bent glass

functional bonding

- large glass sheets
- glass sheets of non-standard shapes
- bent fire-resistant glass in each EI class
- high acoustic insulation R_w
- high light transmittance factor Lt
- UV radiation resistance – no need of PVB film
- highest safety class 1/B/1 (acc. PN-EN 12600)
- resistance to temperatures from –40°C to +50°C
- symmetrical design
- fitting-friendly glass (blunted edges, no need of positioning)
- high water resistance (no need of protecting glass edges)
- high impact resistance – toughened glass
- lower weight than multi-layerd fire-resistant glass
- possibility to combine with most float glass of high thermal properties available in the market (solar control, light transmittance, thermal insulation) = improved building's energy balance

POLFLAM® fire-resistant glass is tested in certified research institutes across Europe.

With a fire resistance test furnace installed at our production facility POLFLAM® can test new solutions in accordance with European standards.

POLFLAM glass in timber structures

POLFLAM glass is installed in traditional timber joinery systems. It can be used both outdoors and indoors. In the timber, POLFLAM glass panels of various geometric shapes (arched, triangles, etc.) are installed.

POLFLAM glass	EI 15	EW 30	EI 30	EI 60		EI 90	EI 120*	EI 180*
Thickness [mm]	16	16	20	25	28	32	35	55
Weight [kg/m²]	33	33	38	45	49	52	57	83
Light transmittance [Lt%]	86,0	86,0	87,6	87,1	86,0	85,8	85,5	85,3
Sound reduction Rw [dB]	**41**	**41**	**42**	**44**	**45**	**44**	**45**	**45**
Safety class	1/B/1 (acc. to PN-EN 12600)							
Operating temperature range	–40°C / +50°C							
Bent glass	yes							

* Tests for resistance to fire are possible to conduct.

This brochure gives a brief overview of the possibilities for POLFLAM fire resistant glass in timber systems. For the correct installation details and instructions the classification or test report from the tested construction should be consulted.

Please contact your local POLFLAM specialist for more information

LIST OF PRODUCTS

POLFLAM glass in timber structures

Product	Fire resistance class	Thickness glass	Max. glass dimensions - portrait [mm] (max. surface area)	Max. glass dimensions - landscape [mm] (max. surface area)	System	Page
POLFLAM EI 15	EI 15	16 mm	1500 x 3000 (A_{max}= 4,5 m^2)	2310 x 1500 (A_{max}= 3,47 m^2)	Partition wall	5
POLFLAM EW 30	EW 30	16 mm	1500 x 3000 (A_{max}= 4,5 m^2)	2540x1500 (A_{max}= 3,81 m^2)	Partition wall	6
POLFLAM EI 30	EI 30	20 mm	1800 x 4200 (A_{max}= 6,35 m^2)	3600 x 1800 (A_{max}= 5,45 m^2)	Partition wall	7
POLFLAM EI 30 DGU	EI 30	20 mm	1800 x 4200 (A_{max}= 6,35 m^2)	3600 x 1800 (A_{max}= 5,45 m^2)	Partition wall	8
POLFLAM EI 30 TGU	EI 30	20 mm	1800 x 4200 (A_{max}= 6,35 m^2)	3600 x 1800 (A_{max}= 5,45 m^2)	Partition wall	9
POLFLAM EI 30	EI 30	20 mm	1500 x 3000 (A_{max}= 4,5 m^2)	1500 x 3000 (A_{max}= 4,5 m^2)	Partition wall	10
POLFLAM EI 30	EI 30	20 mm	658 x 1638	658 x 1638	Door	11
POLFLAM EI 45	EI 45	25 mm	907 x 1980	907 x 1980	Door	12
POLFLAM EI 60	EI 60	28 mm	1500 x 3000 (A_{max}= 4,5 m^2)	1500 x 3000 (A_{max}= 4,5 m^2)	Partition wall	13
POLFLAM EI 60 DGU	EI 60	25 mm	1526 x 1828	1526 x 1828	Partition wall	14
POLFLAM EI 60	EI 60	25 mm	1090 x 2290	1090 x 2290	Partition wall	15
POLFLAM EI 60	EI 60	28 mm	1800 x 4200 (A_{max}= 6,35 m^2)	3600 x 1800 (A_{max}= 5,45 m^2)	Partition wall	16
POLFLAM EI 60 DGU	EI 60	28 mm	1800 x 4200 (A_{max}= 6,35 m^2)	3600 x 1800 (A_{max}= 5,45 m^2)	Partition wall	17
POLFLAM EI 60 TGU	EI 60	28 mm	1800 x 4200 (A_{max}= 6,35 m^2)	3600 x 1800 (A_{max}= 5,45 m^2)	Partition wall	18
POLFLAM EI 90	EI 90	32 mm	270 x 1625	–	Partition wall	19
POLFLAM EI 90	EI 90	34 mm	2150 x 3300	–	Partition wall	20
POLFLAM BR EI 30	EI 30	30 mm	2400 x 4200 (A_{max}= 8,47 m^2)	2400 x 4200 (A_{max}= 8,47 m^2)	Partition wall	22
POLFLAM BR EI 30	EI 30	30 mm	2200 x 4200	2200 x 4200	Partition wall	23-25
POLFLAM BR EI 60	EI 60	35 mm	2200 x 3850 (A_{max}= 7,70 m^2)	2200 x 3850 (A_{max}= 7,70 m^2)	Partition wall	26-28

POLFLAM EI 15

Installation of POLFLAM glass in timber structures

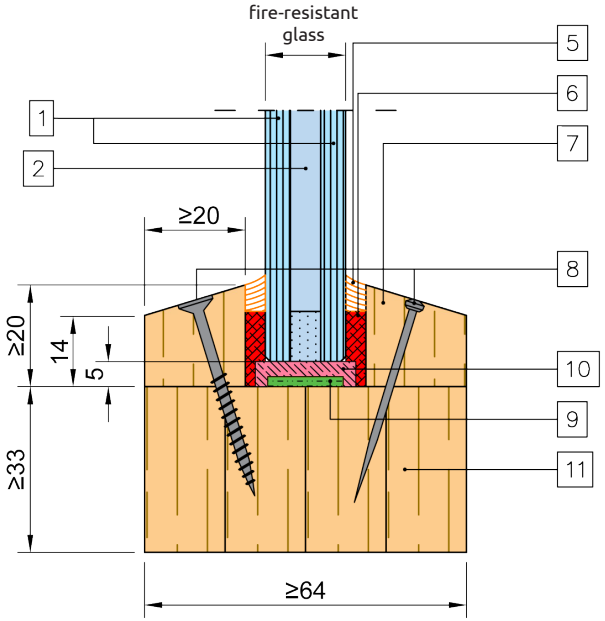

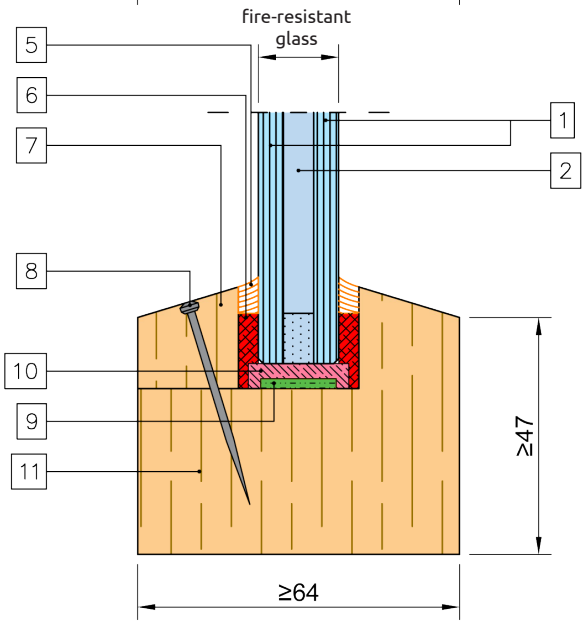

POLFLAM EI 15 (16 mm)	
Partition wall	
max. glass dimensions	1500 mm x 3000 mm (A_{max} = 4,5 m²) - portrait
	2310 mm x 1500 mm (A_{max} = 3,47 m²) - landscape
reference document: Test report LBO-058-N/20	

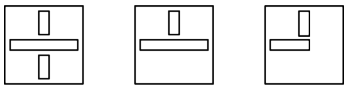

1	thermally toughened glass ≥ 5 mm thickness thermally toughened patterned glass ≥ 6 mm thickness (individual panes can be tinted, coated, surface treated)
2	hydrogel interlayer ≥ 6 mm thickness
5	silicon Dowsil 791
6	ceramic tape KERAFIX 2000 15 x 4 mm
7	glazing bead ≥ 20 mm x 20/14 mm, timber 560 kg/m³
8	nail Ø1,6 x 40 mm or screw Ø3,5 x 40 mm (50 mm from the corner and every 200 mm)
9	intumescent tape KERAFIX FXL200 20 x 2 mm
10	supporting block 5 mm
11	laminated or solid timber 560 kg/m³

Allowed supported construction
concrete wall

POLFLAM EW 30

Installation of POLFLAM glass in timber structures

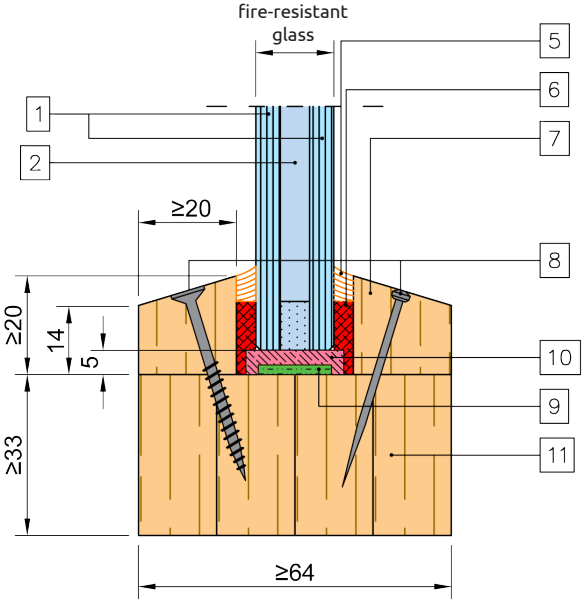

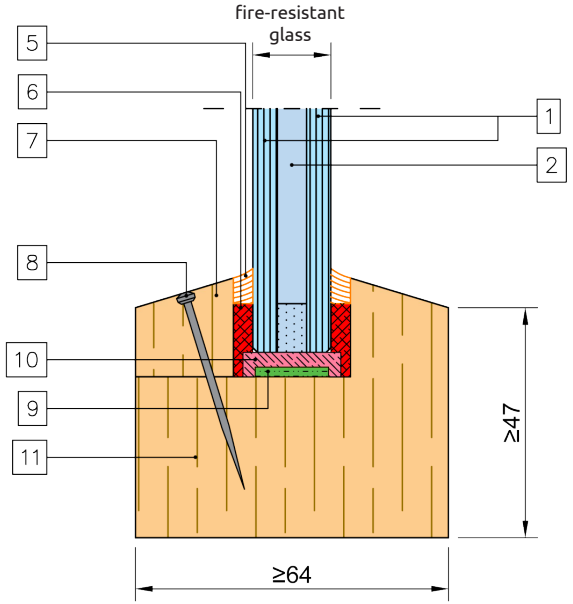

POLFLAM EW 30 (16 mm)	
Partition wall	
max. glass dimensions	1500 mm x 3000 mm (A_{max} = 4,5 m²) - portrait
	2540 mm x1500 mm (A_{max} = 3,81 m²) - landscape
reference document: Test report LBO-058-N/20	

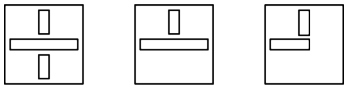

1	thermally toughened glass ≥ 5 mm thickness thermally toughened patterned glass ≥ 6 mm thickness (individual panes can be tinted, coated, surface treated)
2	hydrogel interlayer ≥ 6 mm thickness
5	silicon Dowsil 791
6	ceramic tape KERAFIX 2000 15 x 4 mm
7	glazing bead ≥ 20 mm x 20/14 mm, timber 560 kg/m³
8	nail Ø1,6 x 40 mm or screw Ø3,5 x 40 mm (50 mm from the corner and every 200 mm)
9	intumescent tape KERAFIX FXL200 20 x 2 mm
10	supporting block 5 mm
11	laminated or solid timber 560 kg/m³

Allowed supported construction
concrete wall

POLFLAM EI 30

Installation of POLFLAM glass in timber structures

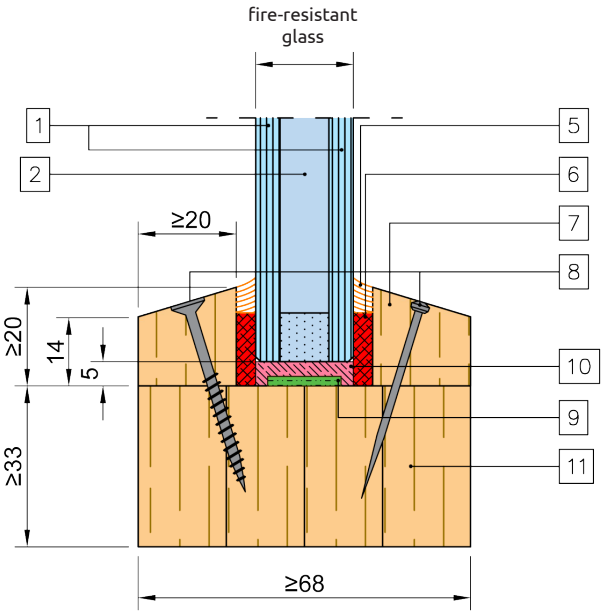

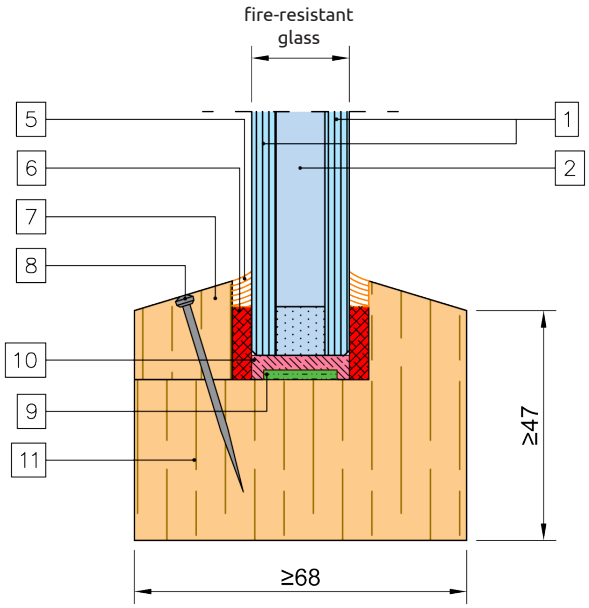

POLFLAM EI 30 (20 mm)	
Partition wall	
max. glass dimensions	1800 mm x 4200 mm (A_{max} = 6,35 m²) - portrait
	3600 mm x 1800 mm (A_{max} = 5,45 m²) - landscape
reference document: in development	

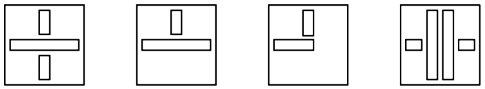

1	thermally toughened glass ≥ 5 mm thickness thermally toughened patterned glass ≥ 6 mm thickness (individual panes can be tinted, coated, surface treated)
2	hydrogel interlayer ≥ 10 mm thickness
5	silicon Dowsil 791
6	ceramic tape KERAFIX 2000 15 x 4 mm
7	glazing bead ≥ 20 mm x 20/14 mm, timber 560 kg/m³
8	nail Ø1,6 x 40 mm or screw Ø3,5 x 40 mm (50 mm from the corner and every 200 mm)
9	intumescent tape KERAFIX FXL200 20 x 2 mm
10	supporting block 5 mm
11	laminated or solid timber 560 kg/m³

Allowed supported construction
concrete wall, plasterboard wall

POLFLAM EI 30 DGU

Installation of POLFLAM glass in timber structures

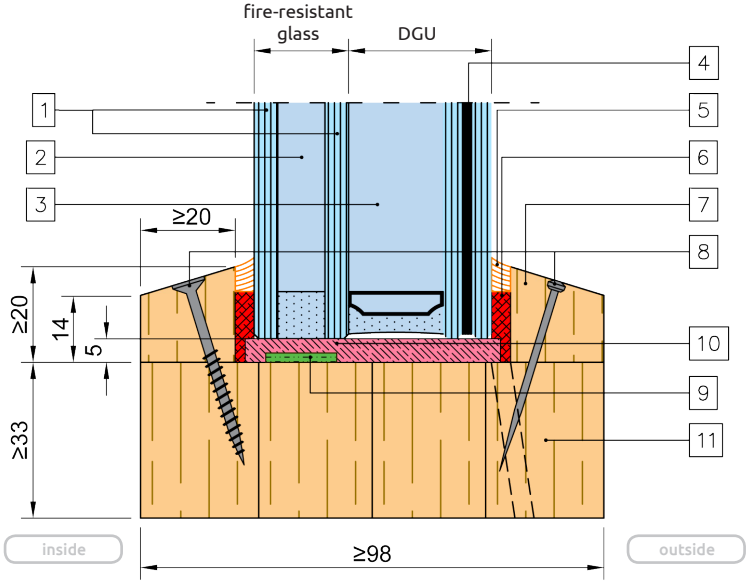

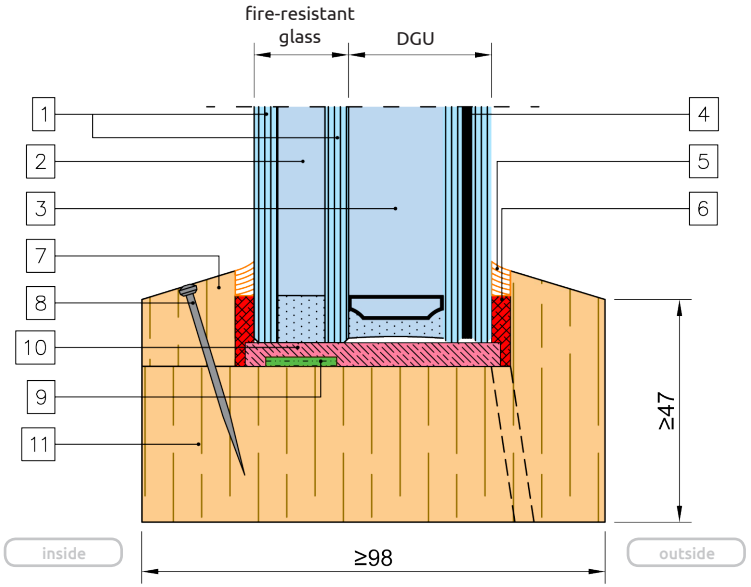

POLFLAM EI 30 (20 mm) DGU	
Partition wall	
max. glass dimensions	1800 mm x 4200 mm (A_{max} = 6,35 m^2) - portrait
	3600 mm x 1800 mm (A_{max} = 5,45 m^2) - landscape
reference document: in development	

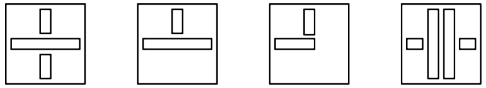

1	thermally toughened glass ≥ 5 mm thickness thermally toughened patterned glass ≥ 6 mm thickness (individual panes can be tinted, coated, surface treated)
2	hydrogel interlayer ≥ 10 mm thickness
3	spacer 8 ÷ 20 mm thickness
4	glass ≥ 4mm thickness: - float; - thermally toughened glass (ESG); - laminated glass (VSG); (individual panes can be tinted, coated, surface treated)
5	silicon Dowsil 791
6	ceramic tape KERAFIX 2000 15 x 4 mm
7	glazing bead ≥ 20 mm x 20/14 mm, timber 560 kg/m^3
8	nail Ø1,6 x 40 mm or screw Ø3,5 x 40 mm (50 mm from the corner and every 200 mm)
9	intumescent tape KERAFIX FXL200 20 x 2 mm
10	supporting block 5 mm
11	laminated or solid timber 560 kg/m^3

Allowed supported construction
concrete wall, plasterboard wall

POLFLAM EI 30 TGU

Installation of POLFLAM glass in timber structures

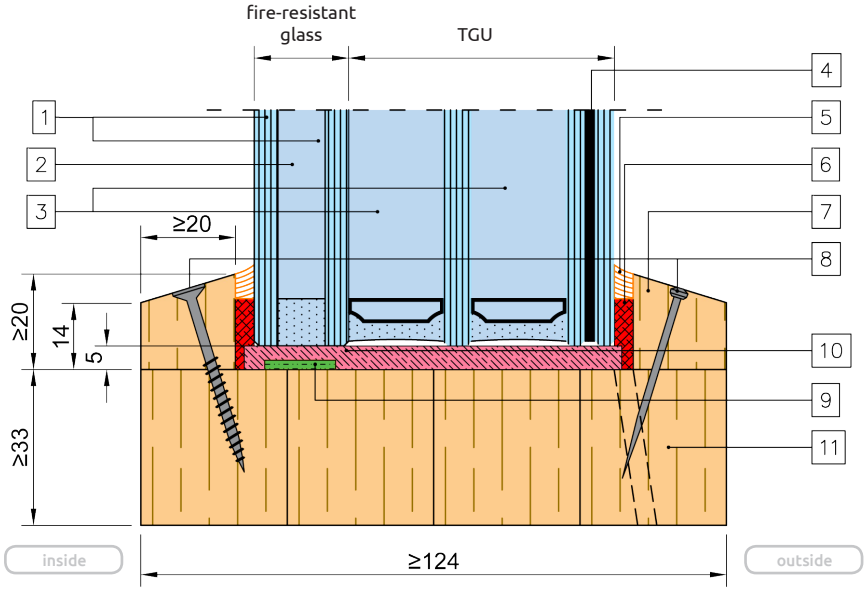

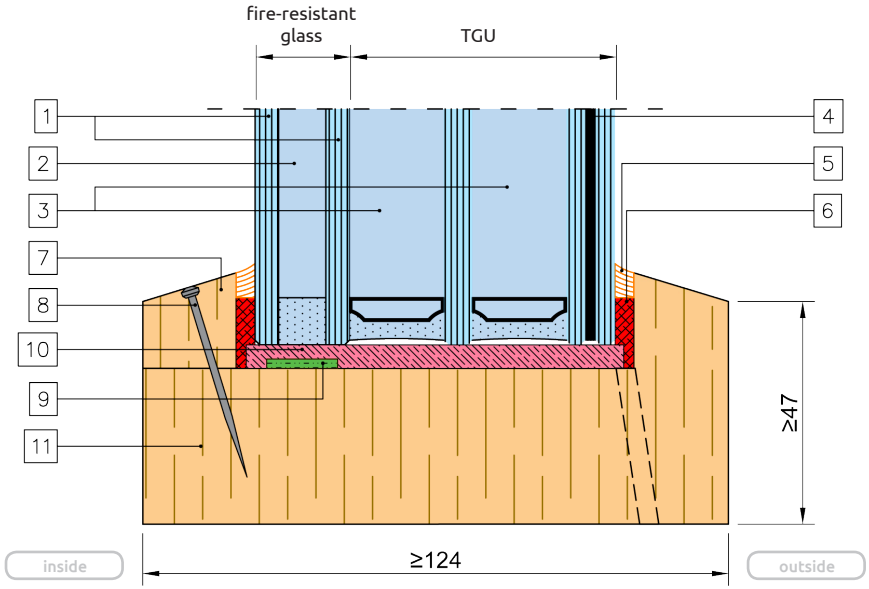

POLFLAM EI 30 (20 mm) TGU	
Partition wall	
max. glass dimensions	1800 mm x 4200 mm (A_{max} = 6,35 m²) - portrait
	3600 mm x 1800 mm (A_{max} = 5,45 m²) - landscape
reference document: in development	

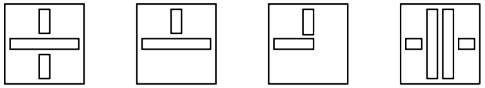

1	thermally toughened glass ≥ 5 mm thickness thermally toughened patterned glass ≥ 6 mm thickness (individual panes can be tinted, coated, surface treated)
2	hydrogel interlayer ≥ 10 mm thickness
3	spacer 8 ÷ 20 mm thickness
4	glass ≥ 4mm thickness: - float; - thermally toughened glass (ESG); - laminated glass (VSG) (individual panes can be tinted, coated, surface treated)
5	silicon Dowsil 791
6	ceramic tape KERAFIX 2000 15 x 4 mm
7	glazing bead ≥ 20 mm x 20/14 mm, timber 560 kg/m³
8	nail Ø1,6 x 40 mm or screw Ø3,5 x 40 mm (50 mm from the corner and every 200 mm)
9	intumescent tape KERAFIX FXL200 20 x 2 mm
10	supporting block 5 mm
11	laminated or solid timber 560 kg/m³

Allowed supported construction
concrete wall, plasterboard wall

POLFLAM EI 30

Installation of POLFLAM glass in timber structures

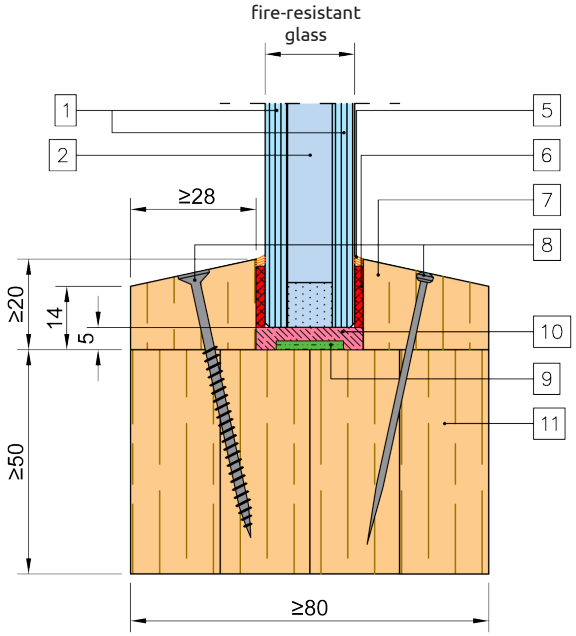

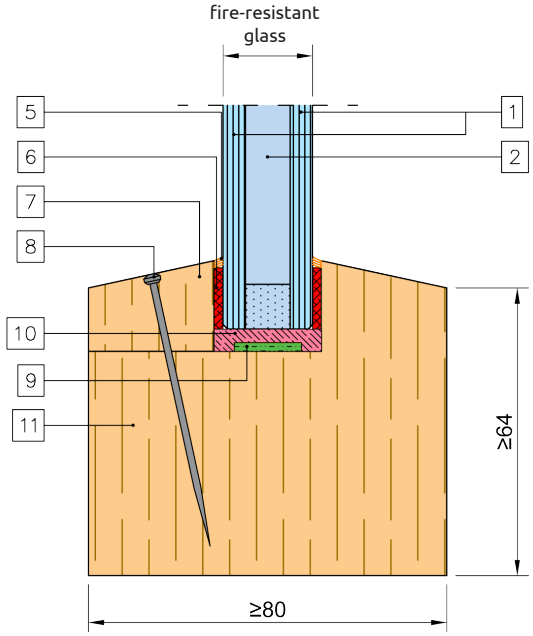

POLFLAM EI 30 (20 mm)	
Partition wall	
max. glass dimensions	1500 mm x 3000 mm (A_{max} = 4,5 m²) - portrait
	1500 mm x 3000 mm (A_{max} = 4,5 m²) - landscape
reference document: LZP01-02135/19/Z00NZP	

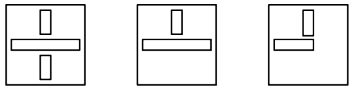

1	thermally toughened glass ≥ 5 mm thickness thermally toughened patterned glass ≥ 6 mm thickness (individual panes can be tinted, coated, surface treated)
2	hydrogel interlayer ≥ 10 mm thickness
5	silicon Dowsil 700 Fire Stop Sealant
6	expanding tape Hanno HANNO Werk
7	glazing bead ≥ 28mm x 20/14 mm timber 480 kg/m³
8	nail Ø1,8 x 60 mm or screw Ø3,5 x 60 mm (50 mm from the corner and every 200 mm)
9	tape PROMAT Promaseal-LW 2 x 30 mm
10	supporting block 5 mm
11	laminated or solid timber 480 kg/m³

Allowed supported construction
aerated concrete

POLFLAM EI 30

Installation of POLFLAM glass in timber structures

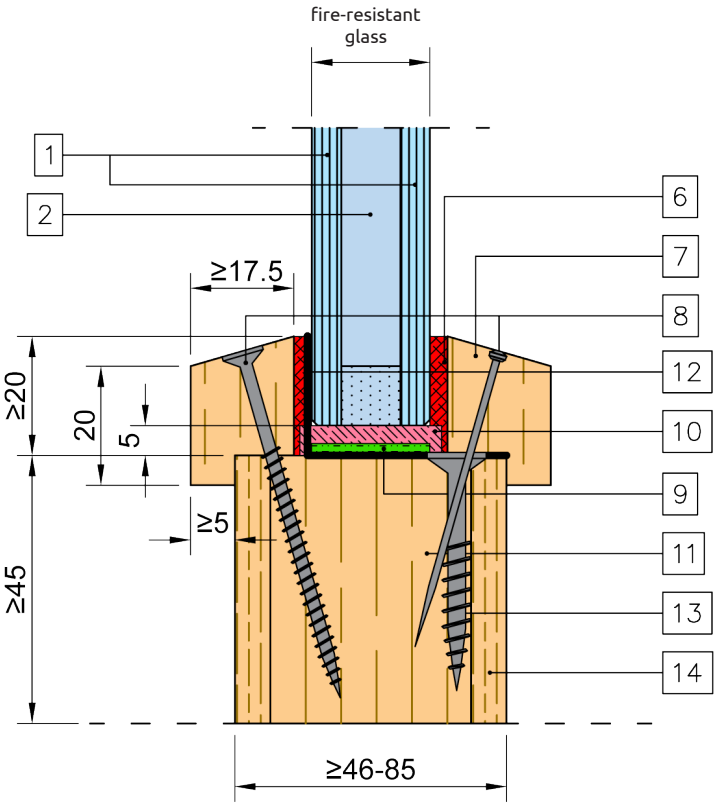

POLFLAM EI 30 (20 mm)	
Door	
max. glass dimensions	658 mm x 1638 mm - portrait
	658 mm x 1638 mm - landscape
reference document: ITB-KOT-2018/0407	

1	thermally toughened glass ≥ 5 mm thickness thermally toughened patterned glass ≥ 6 mm thickness (individual panes can be tinted, coated, surface treated)
2	hydrogel interlayer ≥ 10 mm thickness
6	ceramic tape KERAFIX 2000 8 x 4 mm, PROMAGLAF-HTI 1100 8 x 4 mm, FIBERFRAX 20 x 4 mm
7	glazing bead ≥ 20 mm x ≥ 17,5 mm timber 350 kg/m^3
8	screw Ø3 x 70 mm or nail Ø1,2 x 50 (50 mm from the corner and every 200 mm)
9	intumescent tape: PROMAT Promaseal-HT 1,6 mm, Halspan Glazing Seal 10 x 3 mm or 25 x 3mm, Halspan K 3mm, Therm-A-Line 2 mm
10	supporting block 5 mm
11	multi-layer chipboard 530 kg/m^3
12	glass fixing bracket (according to reference document)
13	screw Ø5 x 40 mm
14	HDF board 1÷6 mm 800 kg/m^3

POLFLAM EI 45

Installation of POLFLAM glass in timber structures

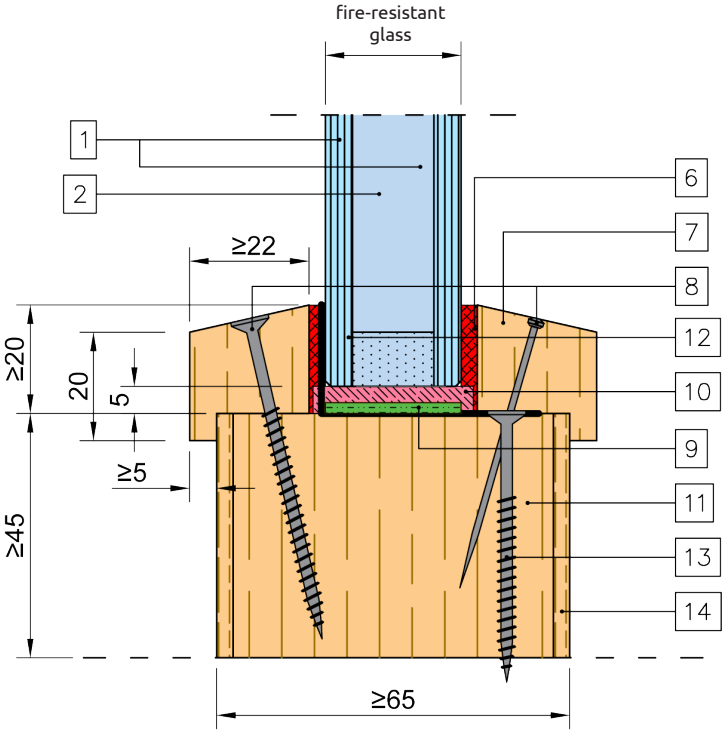

POLFLAM EI 45 (25 mm)	
Door	
max. glass dimensions	907 mm x 1980 mm - portrait
	907 mm x 1980 mm - landscape
reference document: 506/14/Z000NP	

1	thermally toughened glass ≥ 5 mm thickness thermally toughened patterned glass ≥ 6 mm thickness (individual panes can be tinted, coated, surface treated)
2	hydrogel interlayer ≥ 15 mm thickness
6	ceramic tape KERAFIX 2000 8 x 4 mm
7	glazing bead ≥ 20 mm x ≥ 17,5 mm timber 350 kg/m^3
8	screw Ø3 x 70 mm or nail Ø1,2 x 50 (50 mm from the corner and every 200 mm)
9	intumescent tape PROMAT Promaseal-HT 1,6 x 25 mm
10	supporting block 5 mm
11	multi-layer chipboard 530 kg/m^3
12	glass fixing bracket (according to reference document)
13	screw Ø3,5 x 50 mm
14	HDF board 3 mm 800 kg/m^3

POLFLAM EI 60

Installation of POLFLAM glass in timber structures

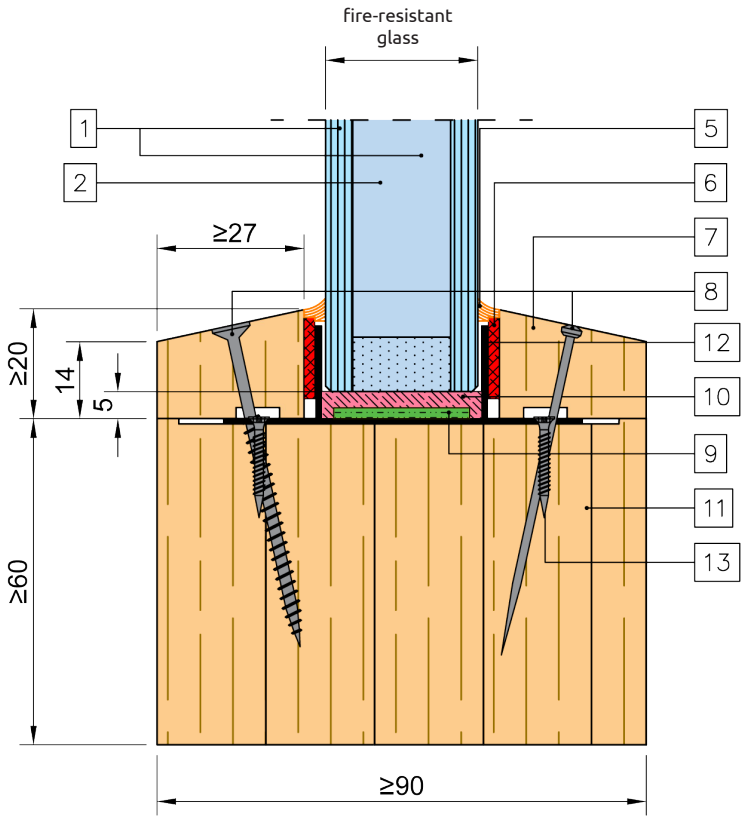

POLFLAM EI 60 (28 mm)	
Partition wall	
max. glass dimensions	1500 mm x 3000 mm (A_{max} = 4,5 m²) - portrait
	1500 mm x 3000 mm (A_{max} = 4,5 m²) - landscape
reference document: LZP03-02135/19/Z00NZP	

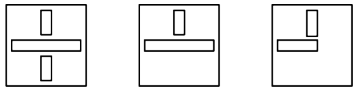

1	thermally toughened glass ≥ 5 mm thickness thermally toughened patterned glass ≥ 6 mm thickness (individual panes can be tinted, coated, surface treated)
2	hydrogel interlayer ≥ 18 mm thickness
5	silicon Dowsil 700 Fire Stop Sealant
6	expanding tape Hanno HANNO Werk
7	glazing bead ≥ 28mm x 20/14 mm timber 580 kg/m³
8	nail Ø1,8 x 60 mm or screw Ø3,5 x 60 mm (50 mm from the corner and every 200 mm)
9	tape PROMAT Promaseal-LW 2 x 30 mm
10	supporting block 5 mm
11	laminated or solid timber 580 kg/m³
12	stainless steel glazing bracket (100 mm from the corner and every 300 mm)
13	screw Ø2 x 20 mm

Allowed supported construction
aerated concrete

POLFLAM EI 60 DGU

Installation of POLFLAM glass in timber structures

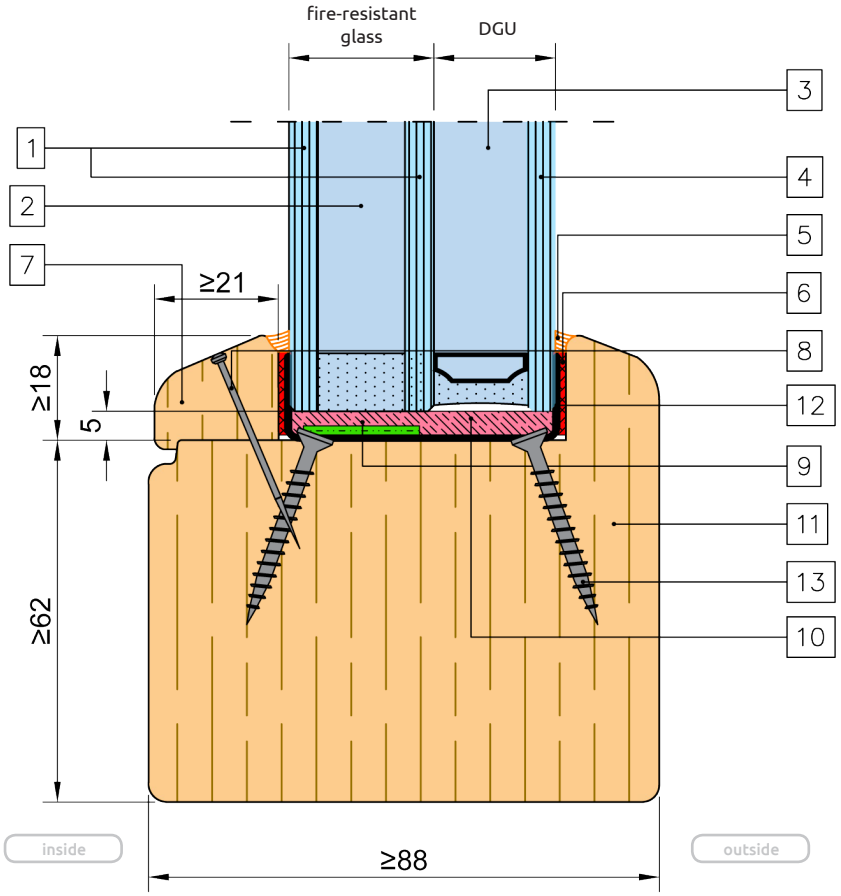

POLFLAM EI 60 (25 mm) DGU	
Partition wall	
max. glass dimensions	1526 mm x 1828 mm - portrait
	1526 mm x 1828 mm - landscape
reference document: LBO-1228.1/18	

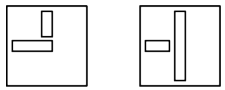

1	thermally toughened glass ≥ 5 mm thickness thermally toughened patterned glass ≥ 6 mm thickness (individual panes can be tinted, coated, surface treated)
2	hydrogel interlayer ≥ 15 mm thickness
3	spacer 8 ÷ 20 mm thickness
4	glass ≥ 4mm thickness: - float; - thermally toughened glass (ESG); - laminated glass (VSG) (individual panes can be tinted, coated, surface treated)
5	PROMAT Mastic
6	intumescent tape PROMAT Promaseal-LW 1 x 10 mm
7	glazing bead ≥ 21 mm x 18 mm timber 700 kg/m^3
8	nail Ø1,1 x 1,1 x 35 mm (50 mm from the corner and every 200 mm)
9	intumescent tape PROMAT Promaseal-LW 2 x 28 mm
10	supporting block 3 mm
11	laminated or solid timber 700 kg/m^3
12	glass fixing bracket(150 mm from the corner and every 350 mm)
13	screw Ø4 x 35 mm

Allowed supported construction: aerated concrete

POLFLAM EI 60

Installation of POLFLAM glass in timber structures

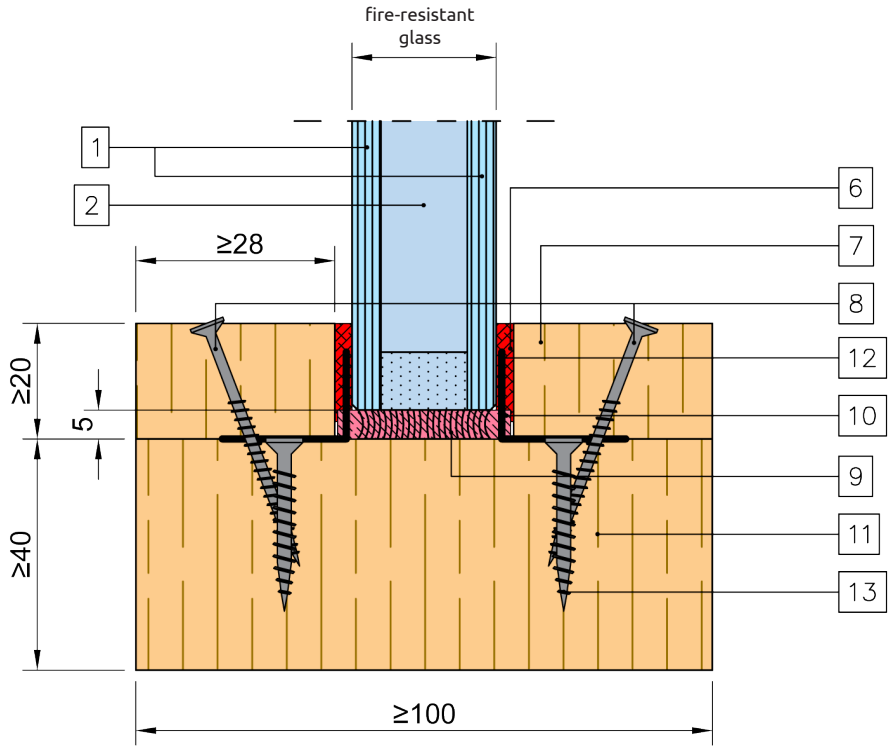

POLFLAM EI 60 (25 mm)	
Partition wall	
max. glass dimensions	1090 mm x 2290 mm - portrait
	1090 mm x 2290 mm - landscape
reference document: AT-15-5216/2015	

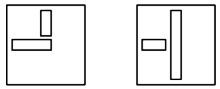

1	thermally toughened glass ≥ 5 mm thickness thermally toughened patterned glass ≥ 6 mm thickness (individual panes can be tinted, coated, surface treated)
2	hydrogel interlayer ≥ 15 mm thickness
6	ceramic tape Gluske 6 x 17 mm
7	glazing bead ≥ 21 mm x ≥ 28 mm timber 650 kg/m^3
8	screw Ø3 x 45 mm
9	fireproof seal: PROMAT Promaseal mastic, Den Braven Pyrocryl, DenBraven Pyropol, Pyroplex AC4
10	supporting block 5 mm
11	multi-layer plywood profile 650 kg/m^3
12	glass fixing bracket (50 mm from the corner and every 150 mm)
13	screw Ø4 x 30 mm

Allowed supported construction
wall of ceramic, concrete or silicate bricks, wall of concrete and reinforced concrete, wall of cellular bricks or perforated bricks, plasterboard wall

POLFLAM EI 60

Installation of POLFLAM glass in timber structures

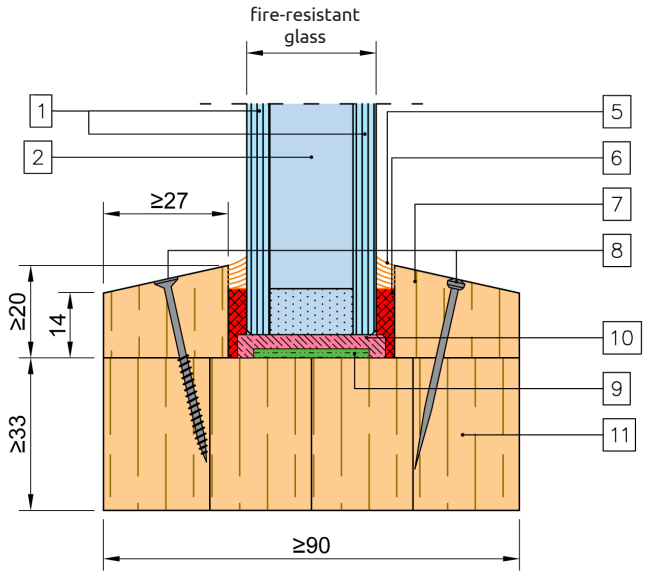

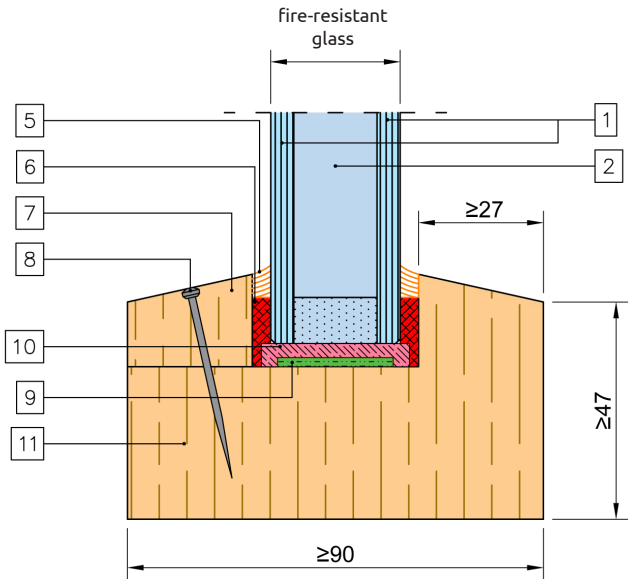

POLFLAM EI 60 (28 mm)	
Partition wall	
max. glass dimensions	1800 mm x 4200 mm (A_{max} = 6,35 m²) - portrait
	3600 mm x 1800 mm (A_{max} = 5,45 m²) - landscape
reference document: in development	

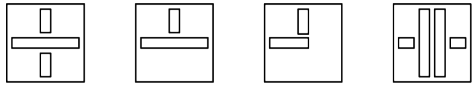

1	thermally toughened glass ≥ 5 mm thickness thermally toughened patterned glass ≥ 6 mm thickness (individual panes can be tinted, coated, surface treated)
2	hydrogel interlayer ≥ 18 mm thickness
5	silicon Dowsil 791
6	ceramic tape KERAFIX 2000 15 x 4 mm
7	glazing bead ≥ 20 mm x 27/14 mm, timber 650 kg/m³
8	nail Ø1,6 x 40 mm or screw Ø3,5 x 40 mm (50 mm from the corner and every 200 mm)
9	intumescent tape KERAFIX FXL200 30 x 2 mm
10	supporting block 5 mm
11	laminated or solid timber 650 kg/m³

Allowed supported construction
concrete wall, plasterboard wall

POLFLAM EI 60 DGU

Installation of POLFLAM glass in timber structures

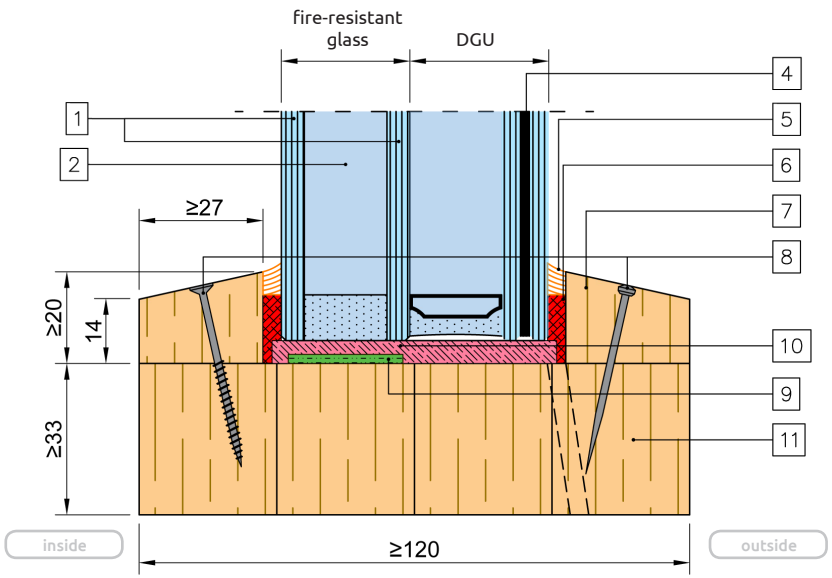

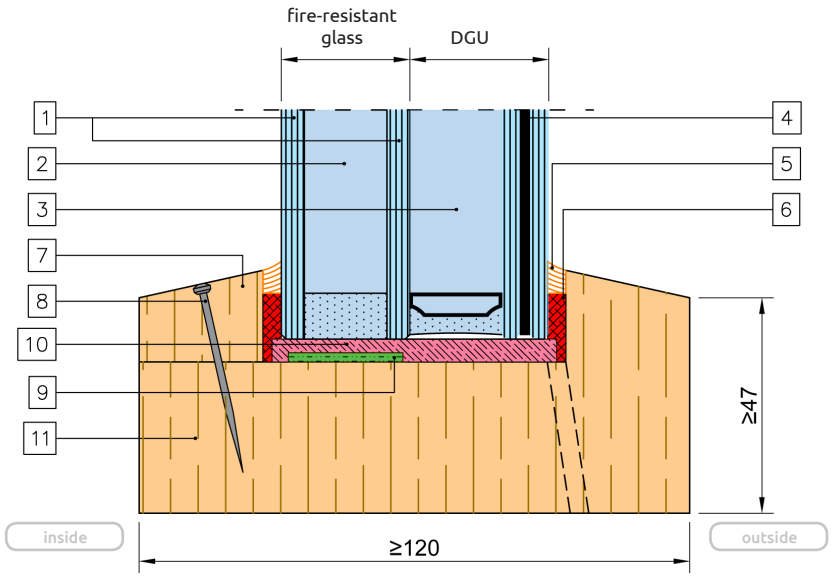

POLFLAM EI 60 (28 mm) DGU	
Partition wall	
max. glass dimensions	1800 mm x 4200 mm (A_{max} = 6,35 m²) - portrait
	3600 mm x 1800 mm (A_{max} = 5,45 m²) - landscape
reference document: in development	

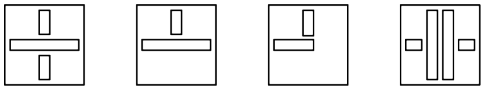

1	thermally toughened glass ≥ 5 mm thickness thermally toughened patterned glass ≥ 6 mm thickness (individual panes can be tinted, coated, surface treated)
2	hydrogel interlayer ≥ 18 mm thickness
3	spacer 8 ÷ 20 mm thickness
4	glass ≥ 4mm thickness: - float; - thermally toughened glass (ESG); - laminated glass (VSG); (individual panes can be tinted, coated, surface treated)
5	silicon Dowsil 791
6	ceramic tape KERAFIX 2000 15 x 4 mm
7	glazing bead ≥ 20 mm x 27/14 mm, timber 650 kg/m³
8	nail Ø1,6 x 40 mm or screw Ø3,5 x 40 mm (50 mm from the corner and every 200 mm)
9	intumescent tape KERAFIX FXL200 30 x 2 mm
10	supporting block 5 mm
11	laminated or solid timber 650 kg/m³

Allowed supported construction
concrete wall, plasterboard wall

POLFLAM EI 60 TGU

Installation of POLFLAM glass in timber structures

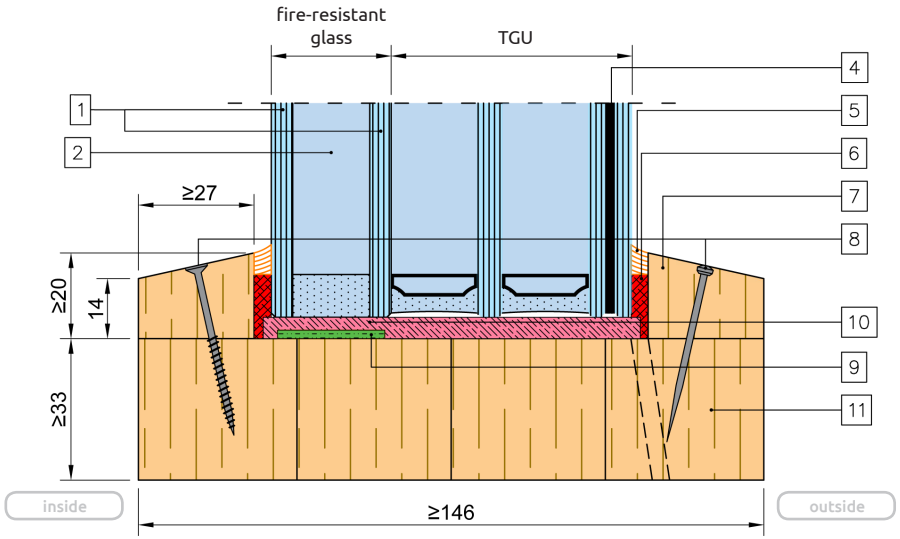

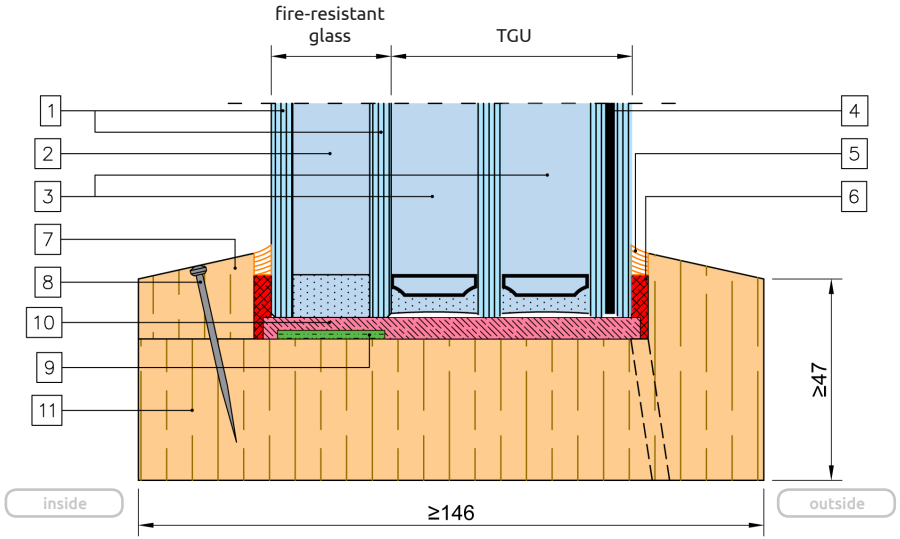

POLFLAM EI 60 (28 mm) TGU	
Partition wall	
max. glass dimensions	1800 mm x 4200 mm (A_{max} = 6,35 m²) - portrait
	3600 mm x 1800 mm (A_{max} = 5,45 m²) - landscape
reference document: in development	

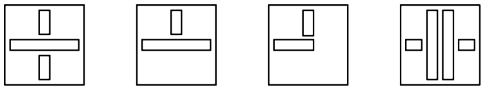

1	thermally toughened glass ≥ 5 mm thickness thermally toughened patterned glass ≥ 6 mm thickness (individual panes can be tinted, coated, surface treated)
2	hydrogel interlayer ≥ 18 mm thickness
3	spacer 8 ÷ 20 mm thickness
4	glass ≥ 4mm thickness: - float; - thermally toughened glass (ESG); - laminated glass (VSG); (individual panes can be tinted, coated, surface treated)
5	silicon Dowsil 791
6	ceramic tape KERAFIX 2000 15 x 4 mm
7	glazing bead ≥ 20 mm x 27/14 mm, timber 650 kg/m³
8	nail Ø1,6 x 40 mm or screw Ø3,5 x 40 mm (50 mm from the corner and every 200 mm)
9	intumescent tape KERAFIX FXL200 30 x 2 mm
10	supporting block 5 mm
11	laminated or solid timber 650 kg/m³

Allowed supported construction
concrete wall, plasterboard wall

POLFLAM EI 90

Installation of POLFLAM glass in timber structures

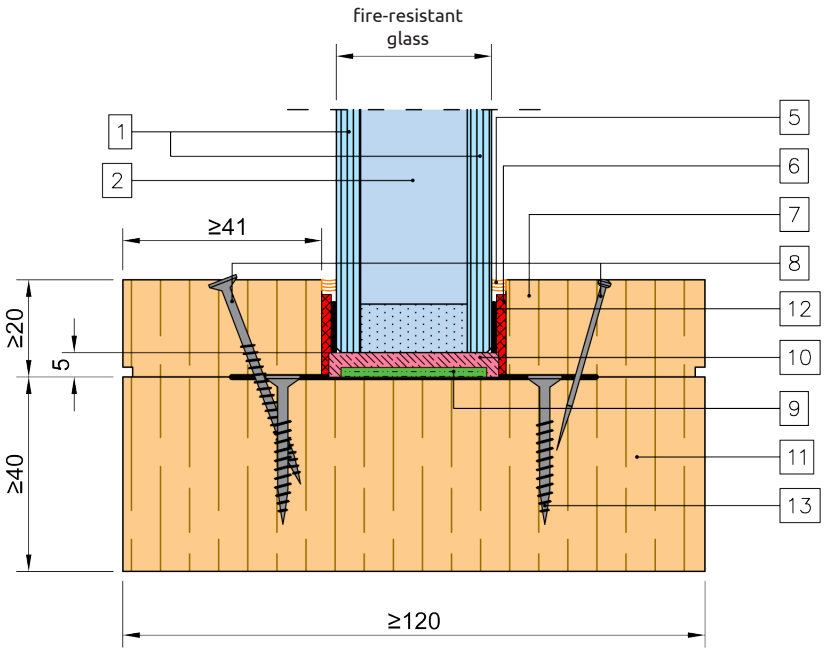

POLFLAM EI 90 (32 mm)	
Partition wall	
max. glass dimensions	270 mm x 1625 mm - portrait
reference document: EFR-17-V-002021	

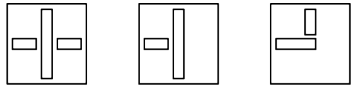

1	thermally toughened glass ≥ 5 mm thickness thermally toughened patterned glass ≥ 6 mm thickness (individual panes can be tinted, coated, surface treated)
2	hydrogel interlayer ≥ 22 mm thickness
5	silicon PROMAT Systemglas
6	ceramic tape KERAFIX 2000 2 x 15 mm
7	glazing bead ≥ 20 mm x ≥ 41 mm timber 520 kg/m³
8	screw Ø3 x 45 mm or nail Ø1 x 35 (50 mm from the corner and every 200 mm)
9	intumescent tape or Kerafix FXL 200 2 x 30 mm
10	supporting block PROMAT Flami 12 3 x 29 x 80 mm
11	laminated or solid timber 520 kg/m³
12	glass fixing bracket (50 mm from the corner and every 200 mm)
13	screw Ø3,5 x 30 mm

Allowed supported construction
concrete

POLFLAM EI 90

Installation of POLFLAM glass in timber structures

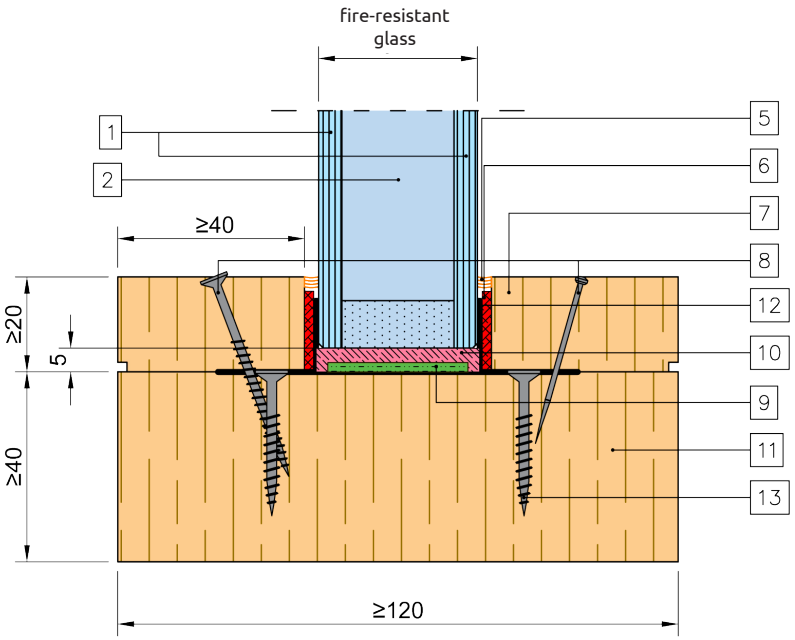

POLFLAM EI 90 (34 mm)	
Partition wall	
max. glass dimensions	2150 mm x 3300 mm - portrait
reference document: EFR-17-V-002021	

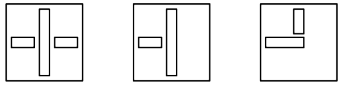

1	thermally toughened glass ≥ 6 mm thickness thermally toughened patterned glass ≥ 6 mm thickness (individual panes can be tinted, coated, surface treated)
2	hydrogel interlayer ≥ 22 mm thickness
5	silicon PROMAT Systemglas
6	ceramic tape KERAFIX 2000 2 x 15 mm
7	glazing bead ≥ 20 mm x ≥ 40 mm timber 520 kg/m^3
8	screw Ø3 x 45 mm or nail Ø1 x 35 (50 mm from the corner and every 200 mm)
9	intumescent tape or Kerafix FXL 200 2 x 30 mm
10	supporting block PROMAT Flami 12 3 x 29 x 80 mm
11	laminated or solid timber 520 kg/m^3
12	glass fixing bracket (50 mm from the corner and every 200 mm)
13	screw Ø3,5 x 30 mm

Allowed supported construction
concrete

POLFLAM BR glass for frameless applications

POLFLAM BR glass allows you to create a transparent firewall without vertical posts (butt-joint glazing) with a height of up to 4200 mm and an unlimited length.

The frameless installation system makes it possible to supplement the partition with glazed fireproof doors or door without fire-resistance.

POLFLAM BR glass	EI 30	EI 60	EI 90*	EI 120*
Thickness [mm]	30	35	45	50
Weight [kg/m²]	65	69	82	90
Light transmittance [Lt%]	84,9	84,5	83,8	81
Sound reduction R_w [dB]	**43**	**44**	**47**	**46**
Safety class	1/B/1 (according to PN-EN 12600)			
Operating temperature range	–40°C / +50°C			
Bent glass	yes			

* Tests for resistance to fire are possible to conduct.

POLFLAM BR EI 30

Installation of POLFLAM glass in timber structures

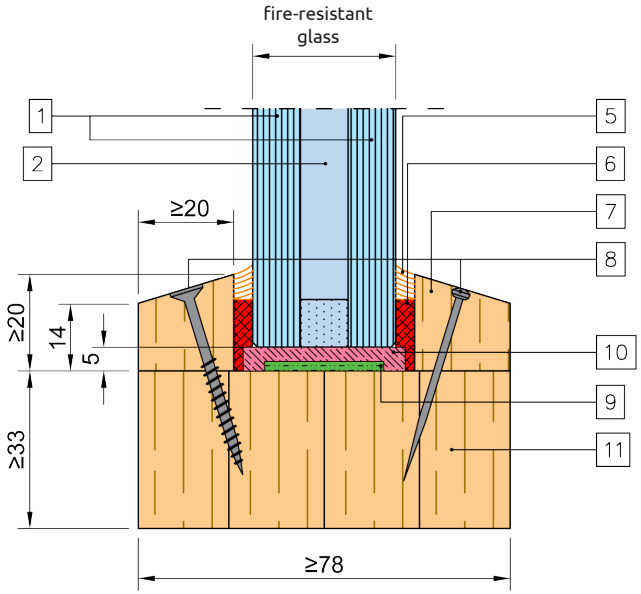

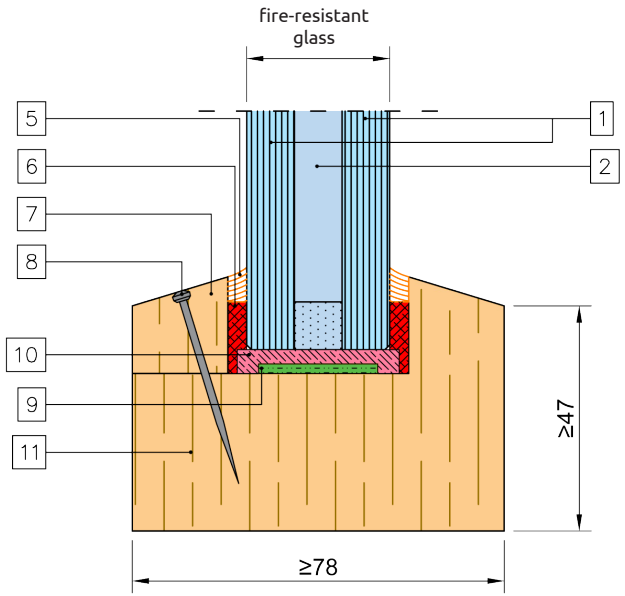

POLFLAM BR EI 30 (30 mm)	
Partition wall	
max. glass dimensions	2400 mm x 4200 mm (A_{max} = 8,47 m²) - portrait
	2400 mm x 4200 mm (A_{max} = 8,47 m²) - landscape
reference document: in development	

1	thermally toughened glass ≥ 10 mm thickness (individual panes can be tinted, coated, surface treated)
2	hydrogel interlayer ≥ 10 mm thickness
5	silicon Dowsil 791
6	ceramic tape KERAFIX 2000 15 x 4 mm
7	glazing bead ≥ 20 mm x 20/14 mm, timber 560 kg/m³
8	nail Ø1,6 x 40 mm or screw Ø3,5 x 40 mm (50 mm from the corner and every 200 mm)
9	intumescent tape KERAFIX FXL200 20 x 2 mm
10	supporting block 5 mm
11	laminated or solid timber 560 kg/m³

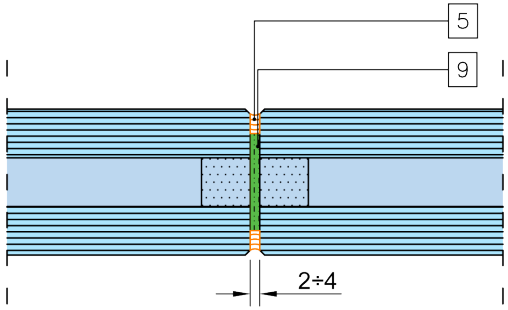

POLFLAM BR EI 30

Installation of POLFLAM BR glass with decorative wooden batten

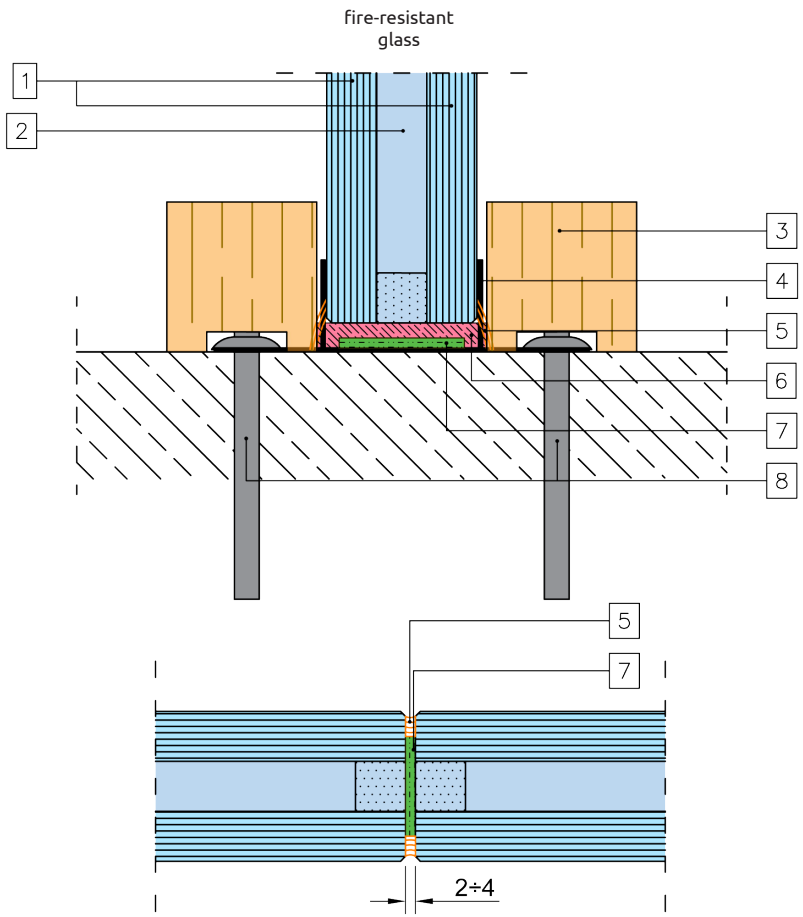

POLFLAM BR EI 30 (30 mm)	
Partition wall	
max. glass dimensions	2200 mm x 4200 mm - portrait
	2200 mm x 4200 mm - landscape
reference document: LBO-731/15	

1	thermally toughened glass ≥ 10mm thickness (individual panes can be tinted, coated, surface treated)
2	hydrogel interlayer ≥ 10 mm thickness
3	timber profile - 650 kg/m^3
4	glass fixing bracket (100 mm from the corner and every 400 mm)
5	silicone: 1) PROMAT Systemglas 2) DOW Corning Firestop 700
6	supporting block 5 mm
7	intumescent tape: 1) PYROPLEX 2 x 22,2 mm 2) KERAFIX Flexpan 2 x 30 mm 3) PROMAT 2 x 30 mm
8	hammer drive anchor Ø6 x 50 mm or screw WSPC Ø4.2 x 40mm

Allowed supported construction
wall of solid bricks, wall of concrete and reinforced concrete, wall of cellular bricks or perforated bricks, plasterboard wall

POLFLAM BR EI 30

Installation of POLFLAM BR glass with decorative wooden batten

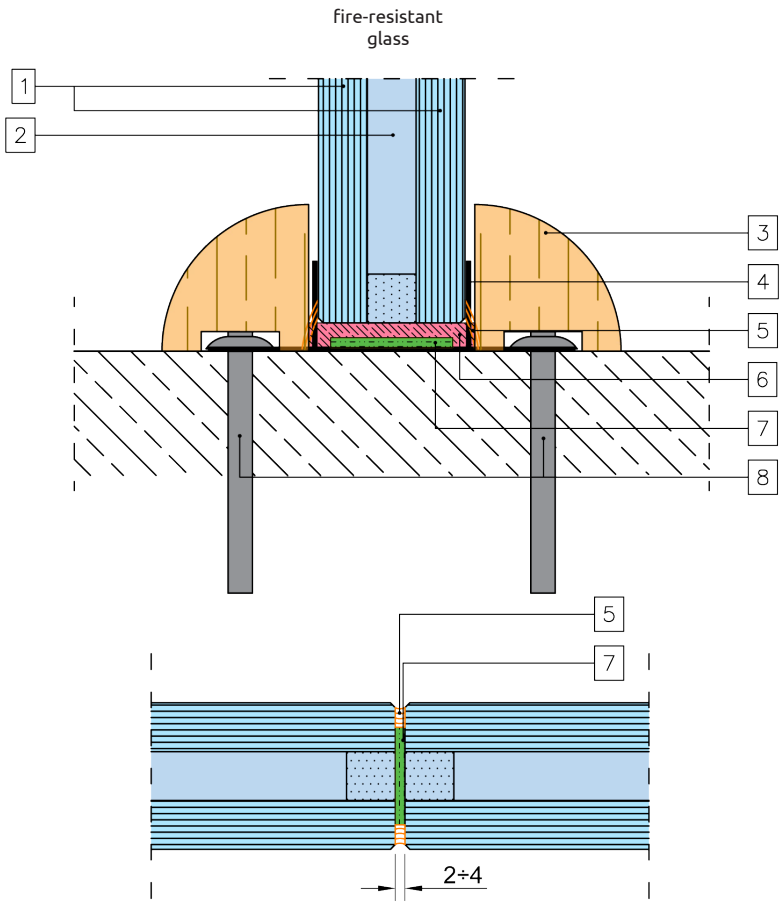

POLFLAM BR EI 30 (30 mm)	
Partition wall	
max. glass dimensions	2200 mm x 4200 mm - portrait
	2200 mm x 4200 mm - landscape
reference document: LBO-731/15	

1	thermally toughened glass ≥ 10 mm thickness (individual panes can be tinted, coated, surface treated)
2	hydrogel interlayer ≥ 10 mm thickness
3	timber profile - 650 kg/m^3
4	glass fixing bracket (100 mm from the corner and every 400 mm)
5	silicone: 1) PROMAT Systemglas 2) DOW Corning Firestop 700
6	supporting block 5 mm
7	intumescent tape: 1) PYROPLEX 2 x 22,2 mm 2) KERAFIX Flexpan 2 x 30 mm 3) PROMAT 2 x 30 mm
8	hammer drive anchor Ø6 x 50 mm or screw WSPC Ø4.2 x 40 mm

Allowed supported construction
wall of solid bricks, wall of concrete and reinforced concrete, wall of cellular bricks or perforated bricks, plasterboard wall

POLFLAM BR EI 30

Installation of POLFLAM BR glass with decorative wooden batten

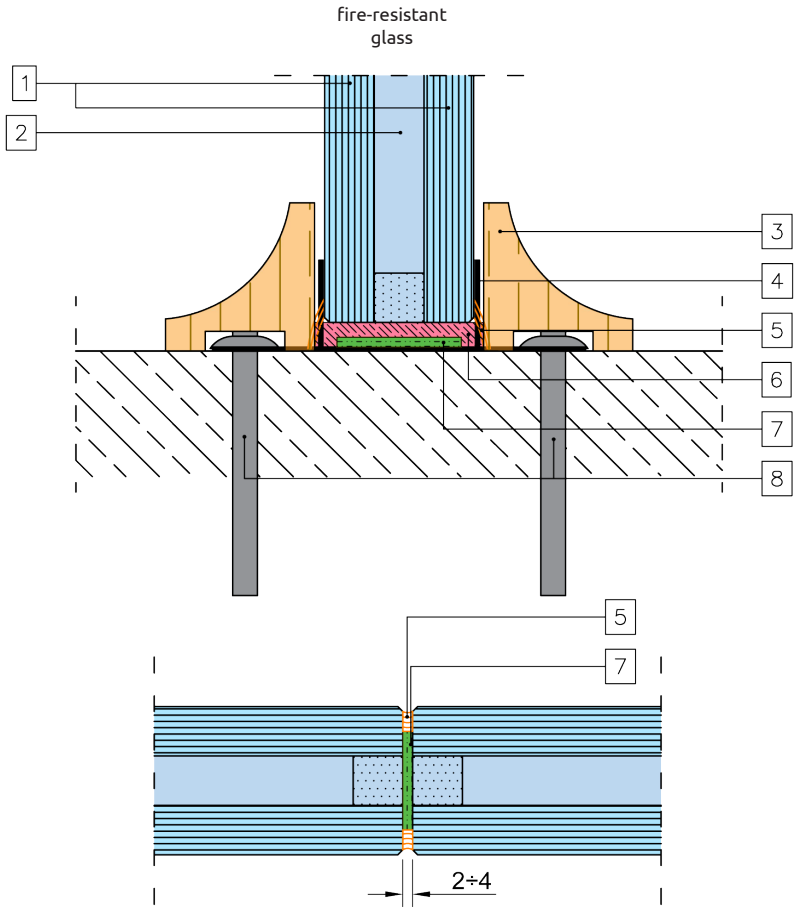

POLFLAM BR EI 30 (30 mm)	
Partition wall	
max. glass dimensions	2200 mm x 4200 mm - portrait
	2200 mm x 4200 mm - landscape
reference document: LBO-731/15	

1	thermally toughened glass ≥ 10mm thickness (individual panes can be tinted, coated, surface treated)
2	hydrogel interlayer ≥ 10 mm thickness
3	timber profile - 650 kg/m^3
4	glass fixing bracket (100 mm from the corner and every 400 mm)
5	silicone: 1) PROMAT Systemglas 2) DOW Corning Firestop 700
6	supporting block 5 mm
7	intumescent tape: 1) PYROPLEX 2 x 22,2 mm 2) KERAFIX Flexpan 2 x 30 mm 3) PROMAT 2 x 30 mm
8	hammer drive anchor Ø6 x 50 mm or screw WSPC Ø4.2 x 40mm

Allowed supported construction
wall of solid bricks, wall of concrete and reinforced concrete, wall of cellular bricks or perforated bricks, plasterboard wall

POLFLAM BR EI 60

Installation of POLFLAM BR glass with decorative wooden batten

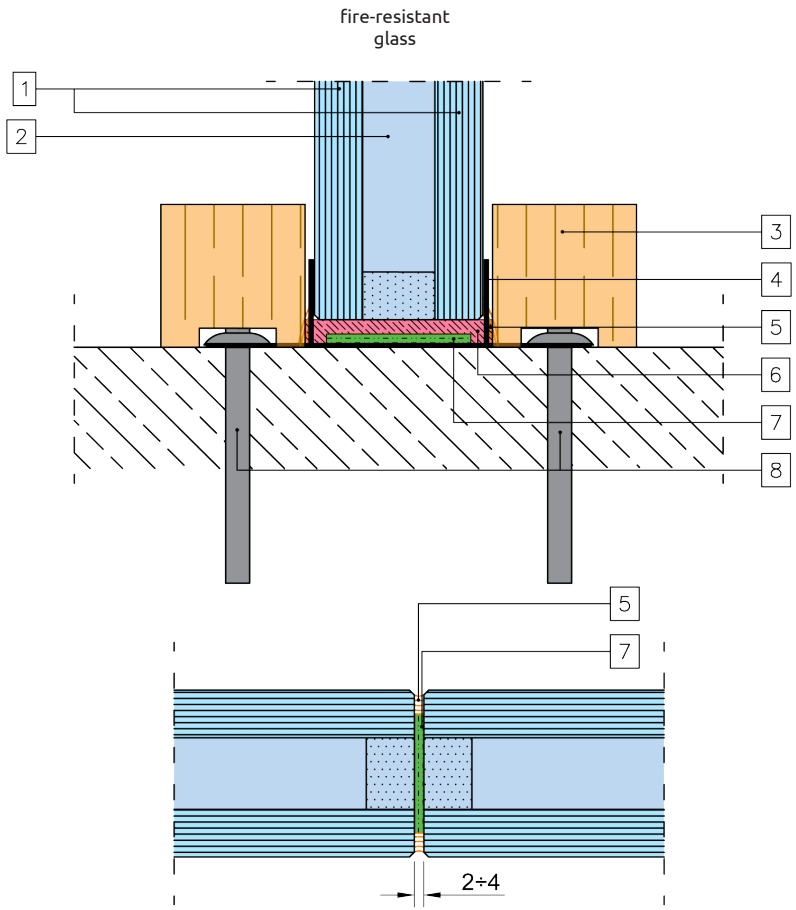

POLFLAM BR EI 60 (35 mm)	
Partition wall	
max. glass dimensions	2200 mm x 3850 mm (A_{max} = 7,70 m^2) - portrait
	2200 mm x 3850 mm (A_{max} = 7,70 m^2) - landscape
reference document: LBO-1343/19	

1	thermally toughened glass ≥ 10 mm thickness (individual panes can be tinted, coated, surface treated)
2	hydrogel interlayer ≥ 15 mm thickness
3	timber profile - 650 kg/m^3
4	glass fixing bracket (100 mm from the corner and every 400 mm)
5	silicone: 1) PROMAT Systemglas 2) DOW Corning Firestop 700
6	supporting block 5 mm
7	intumescent tape: 1) PYROPLEX 2 x 22,2 mm 2) KERAFIX Flexpan 2 x 30 mm 3) PROMAT 2 x 30 mm
8	hammer drive anchor Ø6 x 50 mm or screw WSPC Ø4.2 x 40 mm

Allowed supported construction
wall of solid bricks, wall of concrete and reinforced concrete, wall of cellular bricks or perforated bricks, plasterboard wall

POLFLAM BR EI 60

Installation of POLFLAM BR glass with decorative wooden batten

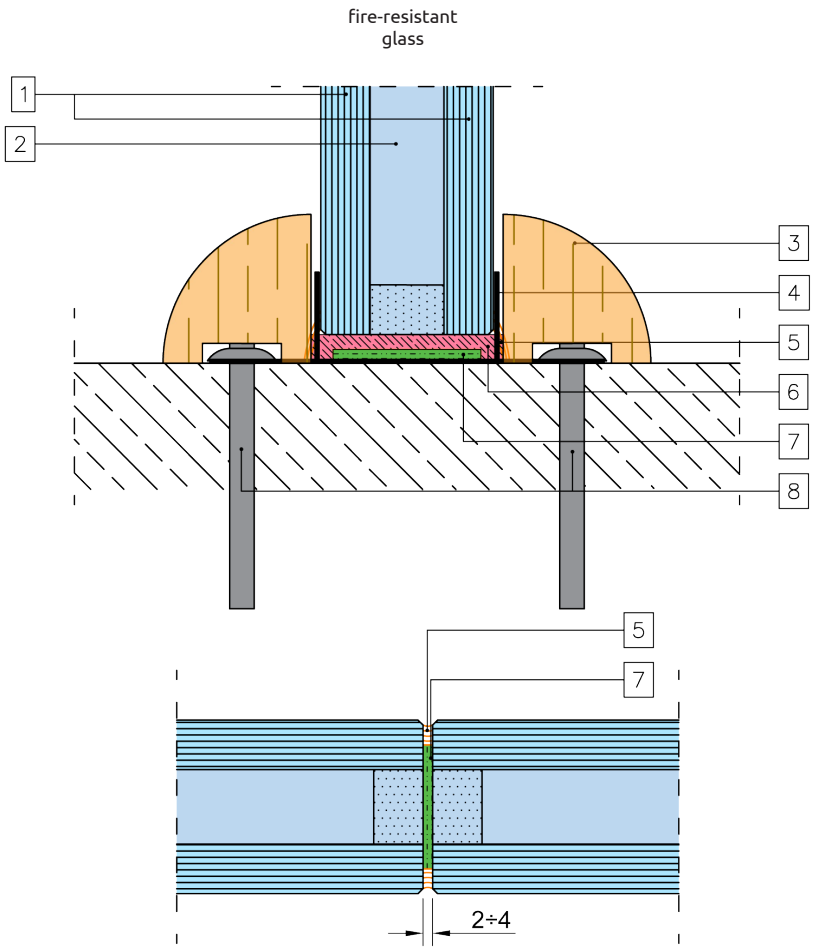

POLFLAM BR EI 60 (35 mm)	
Partition wall	
max. glass dimensions	2200 mm x 3850 mm (A_{max} = 7,70 m^2) - portrait
	2200 mm x 3850 mm (A_{max} = 7,70 m^2) - landscape
reference document: LBO-1343/19	

1	thermally toughened glass ≥ 10mm thickness (individual panes can be tinted, coated, surface treated)
2	hydrogel interlayer ≥ 15 mm thickness
3	timber profile - 650 kg/m^3
4	glass fixing bracket (100 mm from the corner and every 400 mm)
5	silicone: 1) PROMAT Systemglas 2) DOW Corning Firestop 700
6	supporting block 5 mm
7	intumescent tape: 1) PYROPLEX 2 x 22,2 mm 2) KERAFIX Flexpan 2 x 30 mm 3) PROMAT 2 x 30 mm
8	hammer drive anchor Ø6 x 50 mm or screw WSPC Ø4.2 x 40mm

Allowed supported construction
wall of solid bricks, wall of concrete and reinforced concrete, wall of cellular bricks or perforated bricks, plasterboard wall

POLFLAM BR EI 60

Installation of POLFLAM BR glass with decorative wooden batten

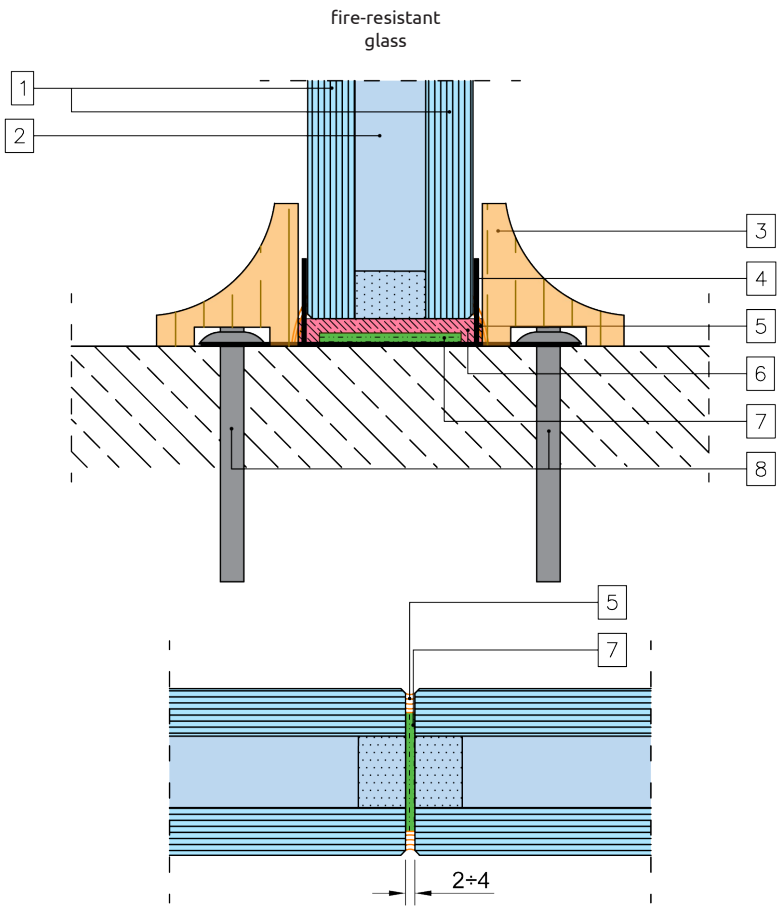

POLFLAM BR EI 60 (35 mm)	
Partition wall	
max. glass dimensions	2200 mm x 3850 mm (A_{max} = 7,70 m^2) - portrait
	2200 mm x 3850 mm (A_{max} = 7,70 m^2) - landscape
reference document: LBO-1343/19	

1	thermally toughened glass ≥ 10 mm thickness (individual panes can be tinted, coated, surface treated)
2	hydrogel interlayer ≥ 15 mm thickness
3	timber profile - 650 kg/m^3
4	glass fixing bracket (100 mm from the corner and every 400 mm)
5	silicone: 1) PROMAT Systemglas 2) DOW Corning Firestop 700
6	supporting block 5 mm
7	intumescent tape: 1) PYROPLEX 2 x 22,2 mm 2) KERAFIX Flexpan 2 x 30 mm 3) PROMAT 2 x 30 mm
8	hammer drive anchor Ø6 x 50 mm or screw WSPC Ø4.2 x 40 mm

Allowed supported construction
wall of solid bricks, wall of concrete and reinforced concrete, wall of cellular bricks or perforated bricks, plasterboard wall

INTERIORS

WINDOWS
AND DOORS

POLFLAM®
FIRE RESISTANT GLASS

POLFLAM sp. z o.o.
ul. Solidarności 1, Runów
05-504 Złotokłos, Poland
Phone: +48 22 726 92 17
E-mail: info@polflam.com,
export@polflam.com
www.polflam.com